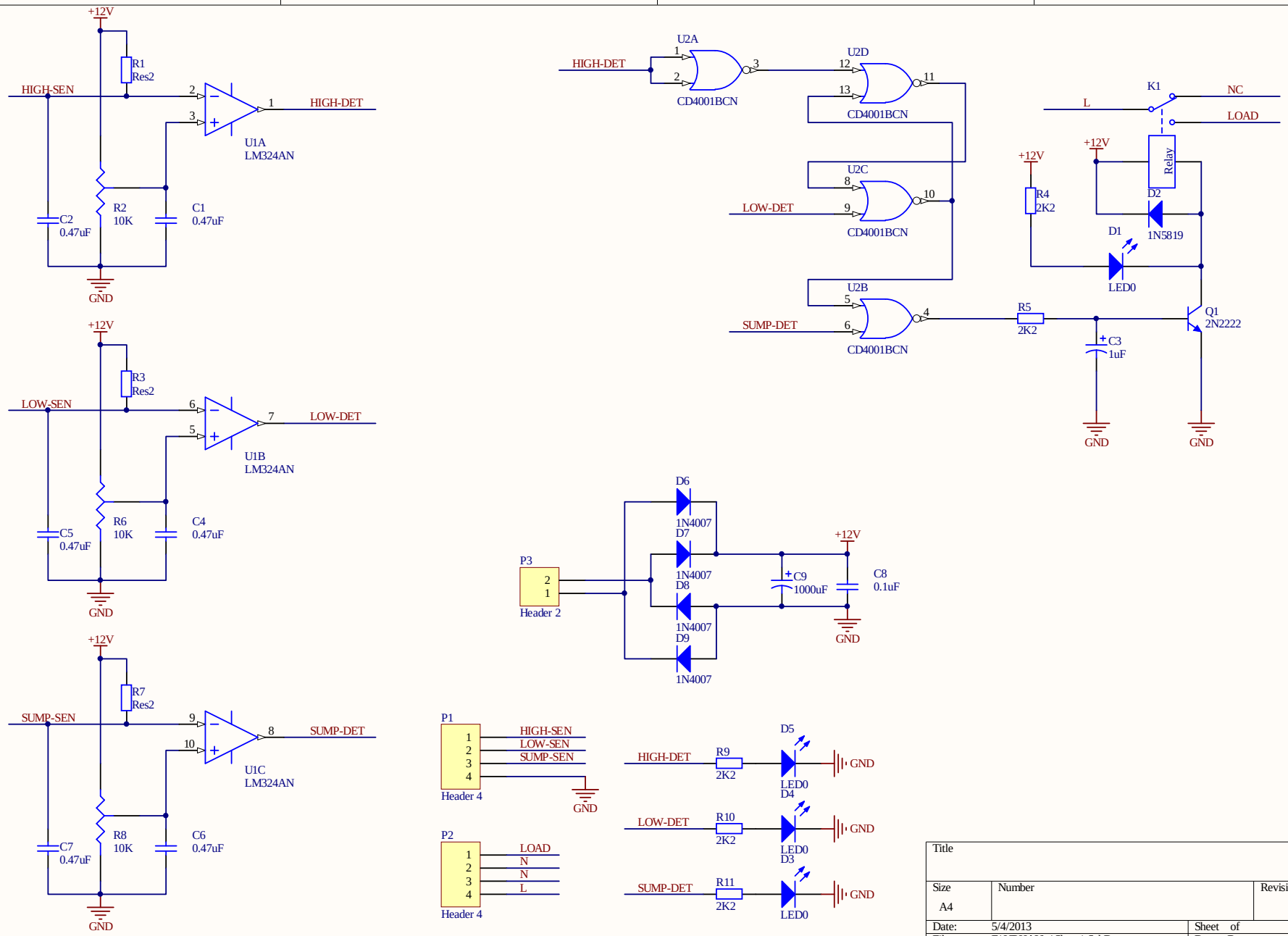

Title		
Size A4	Number	Revision
Date: 5/4/2013		Sheet of
File: F:\UDHAY\..\Sheet1.SchDoc		Drawn By: