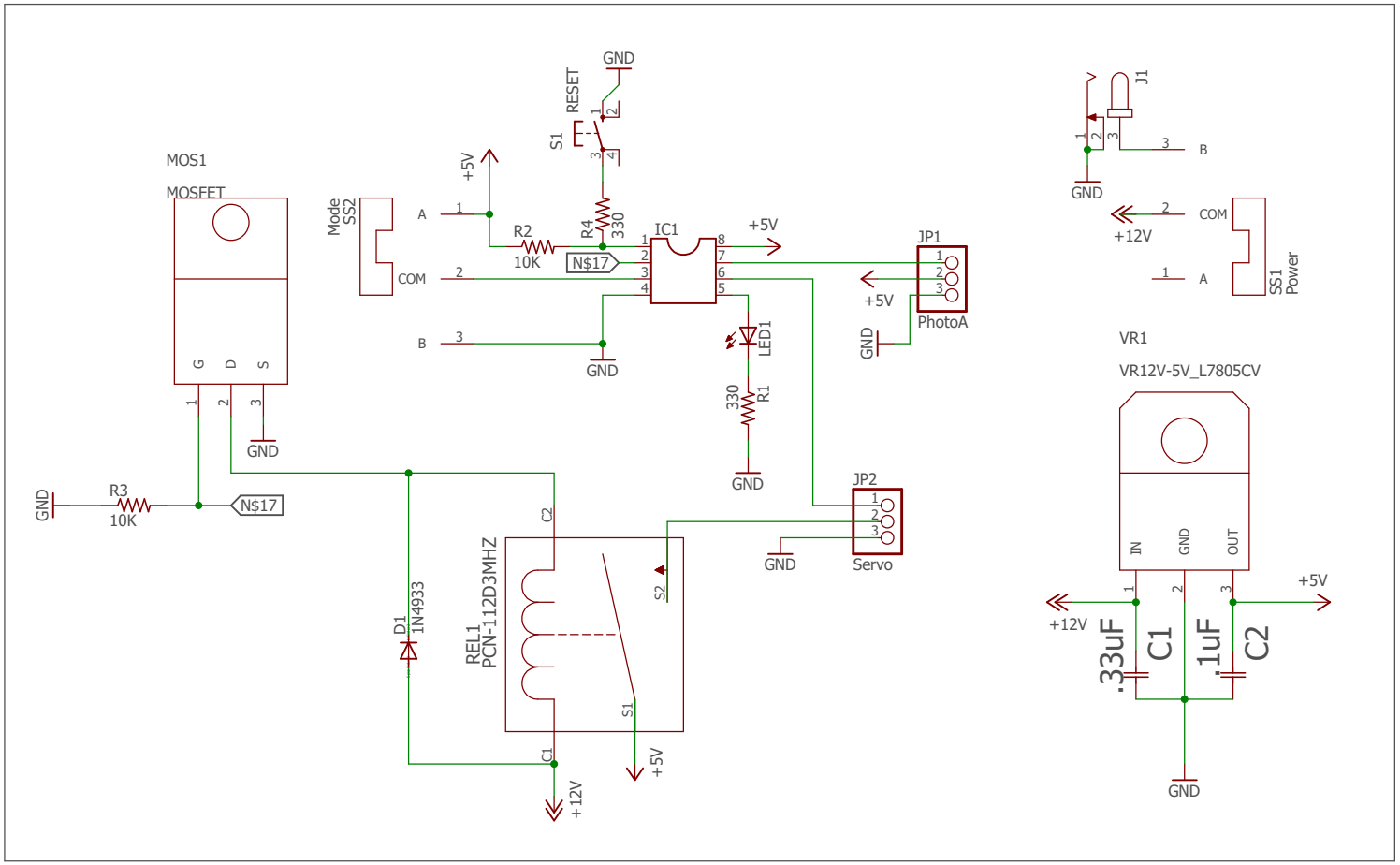

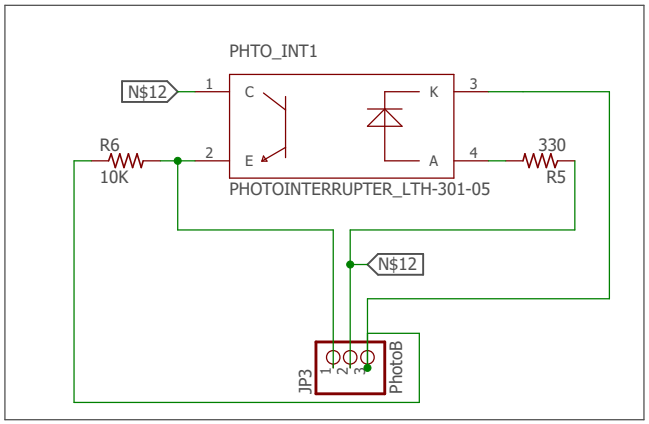

8/30/2017 9:23 PM f=0.90 D:\Eagle Directories\projects\examples\Prusa AO\Prusa AO Main PCB.sch (Sheet: 1/1)