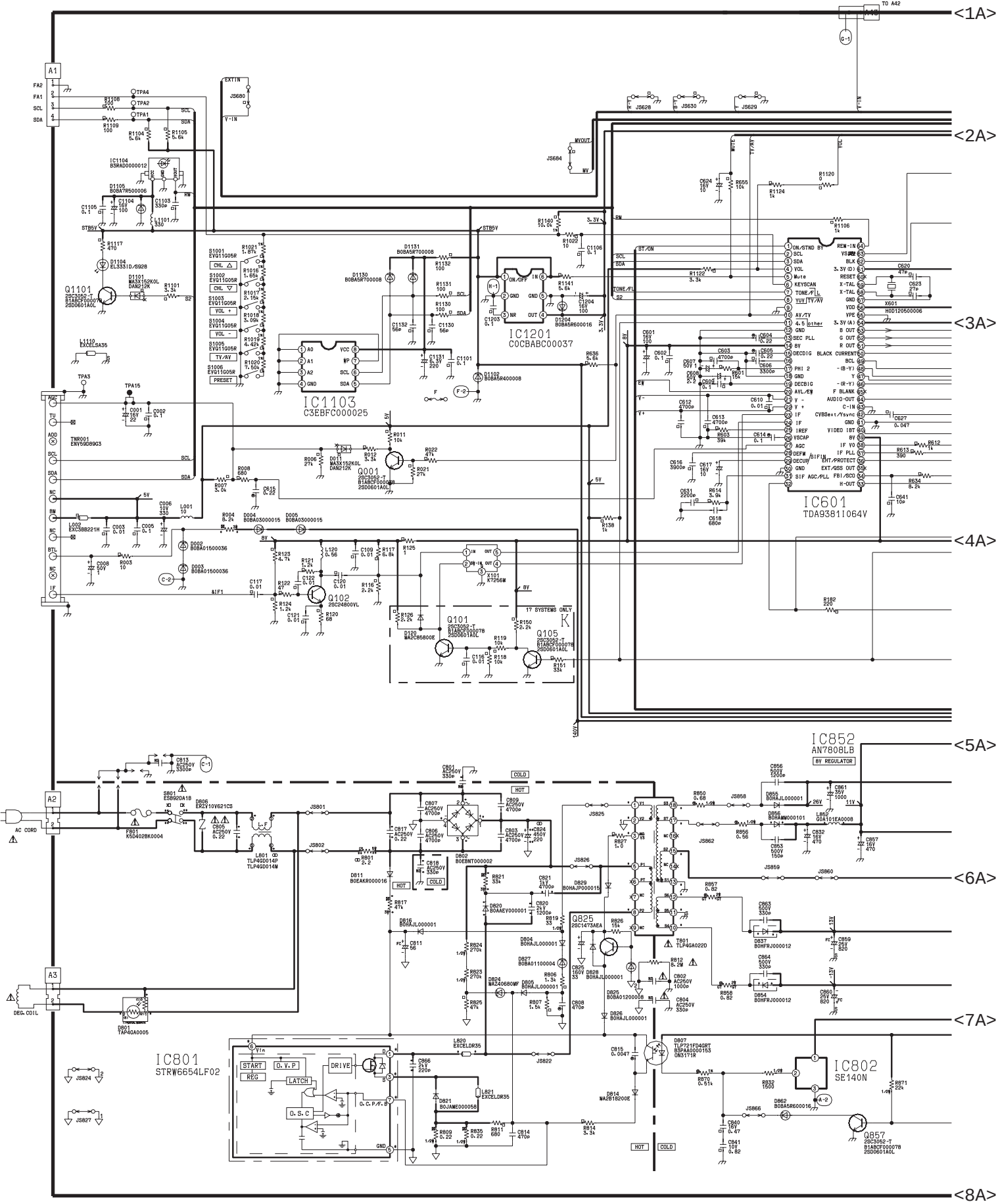

A Board TC-21PS70R Schematic Diagram (1 of 3)

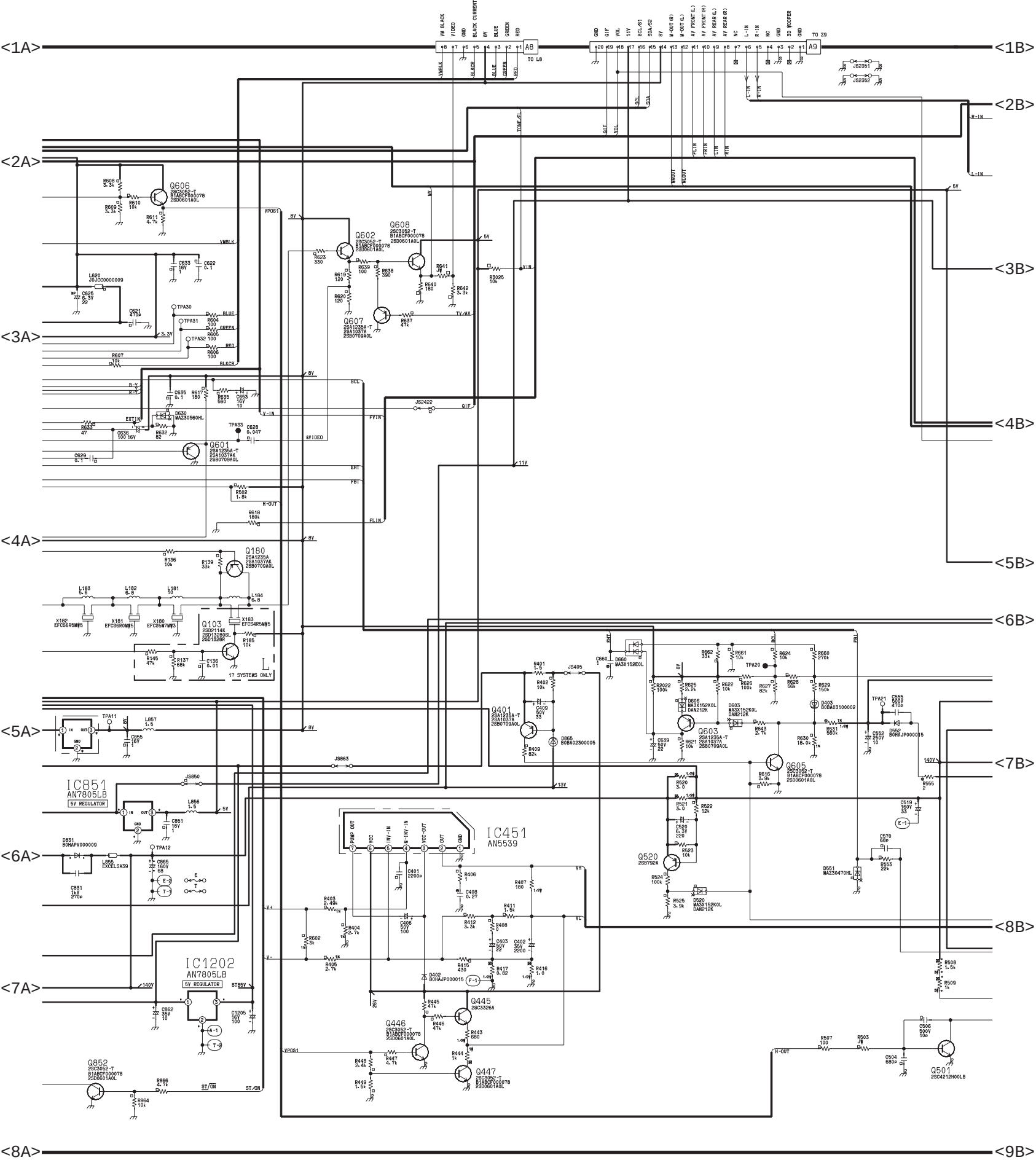

A Board TC-21PS70R Schematic Diagram (2 of 3)

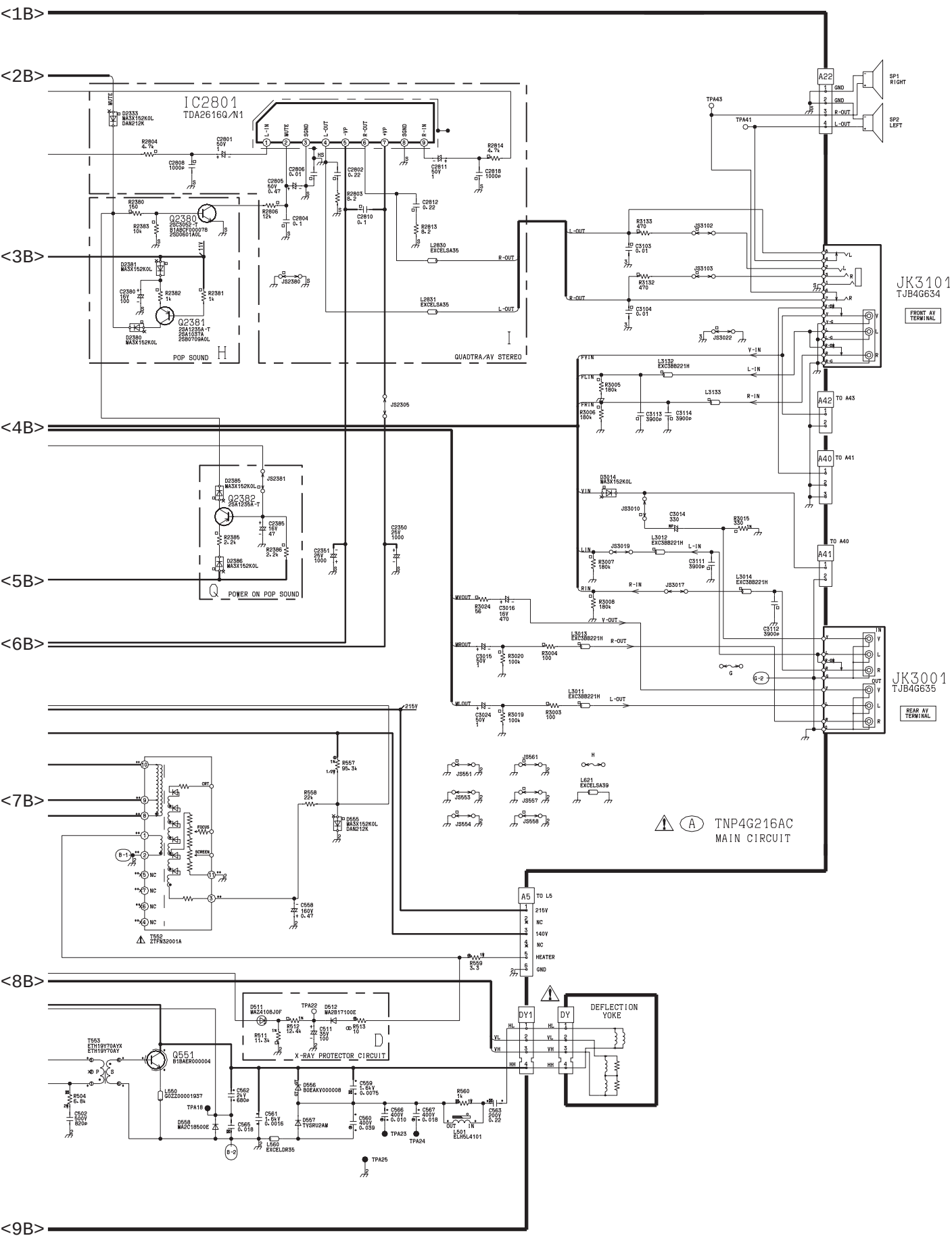

A Board TC-21PS70R Schematic Diagram (3 of 3)

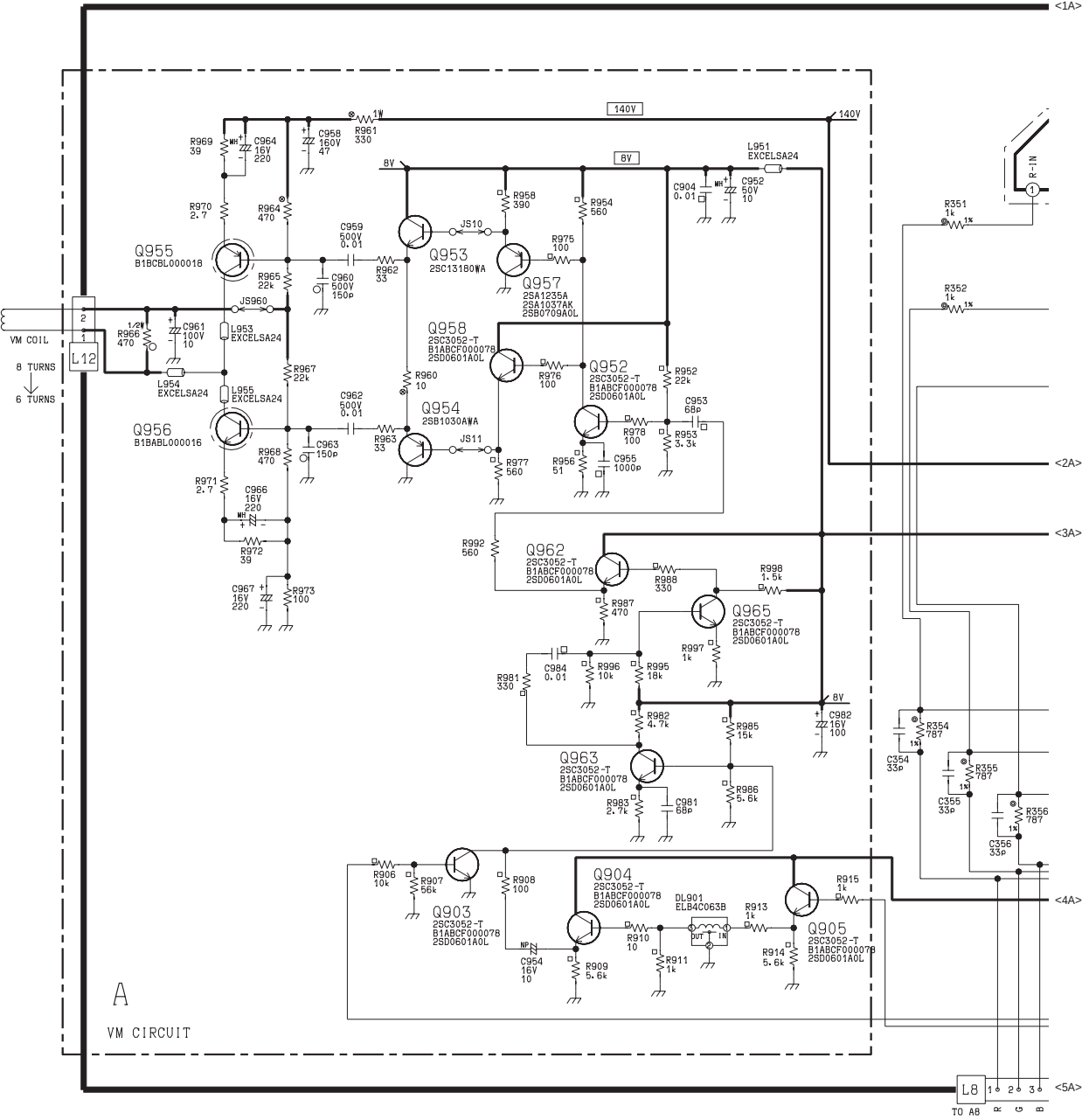

L Board TC-21PS70R Schematic Diagram (1 of 2)

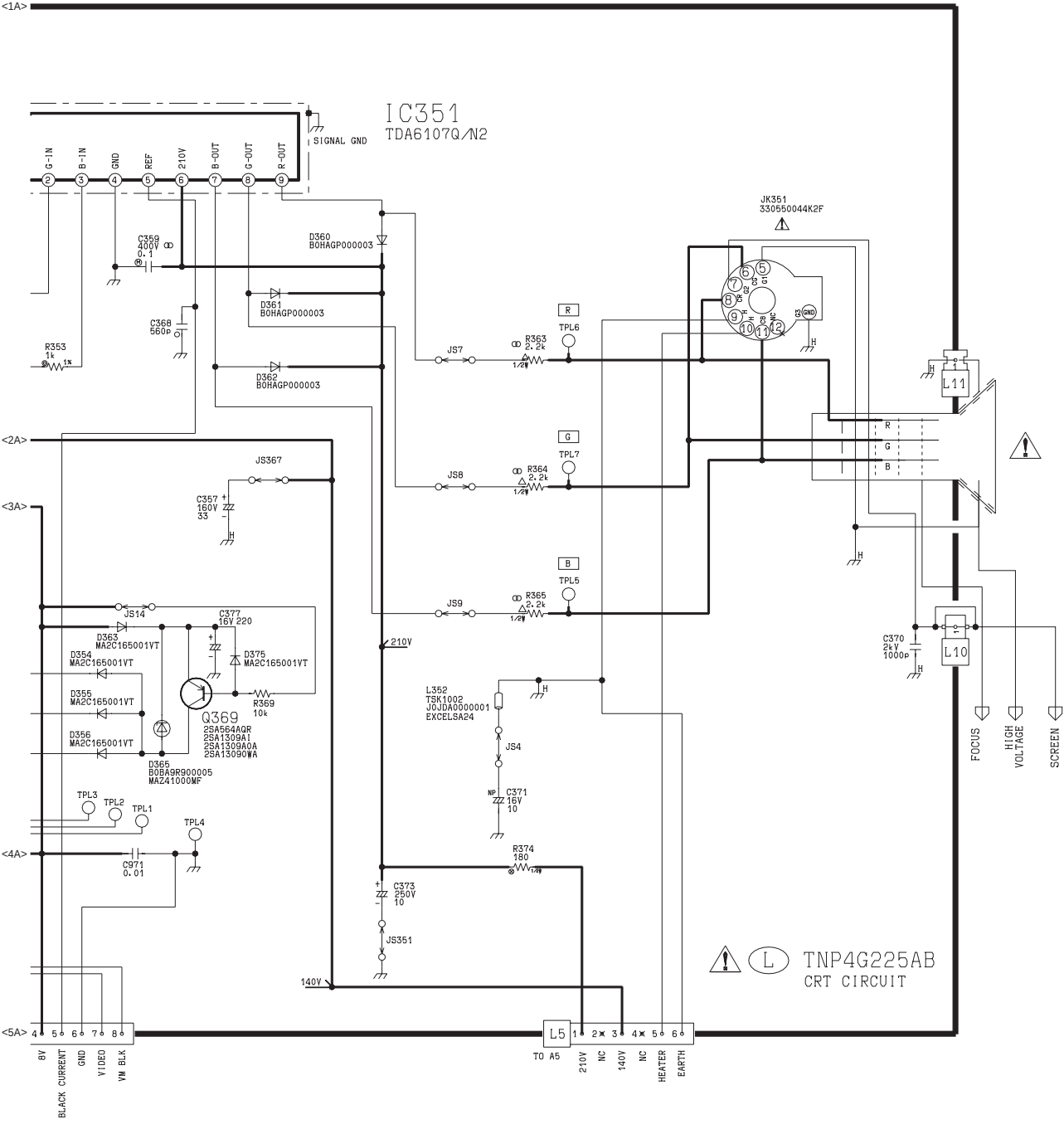

L Board TC-21PS70R Schematic Diagram (2 of 2)

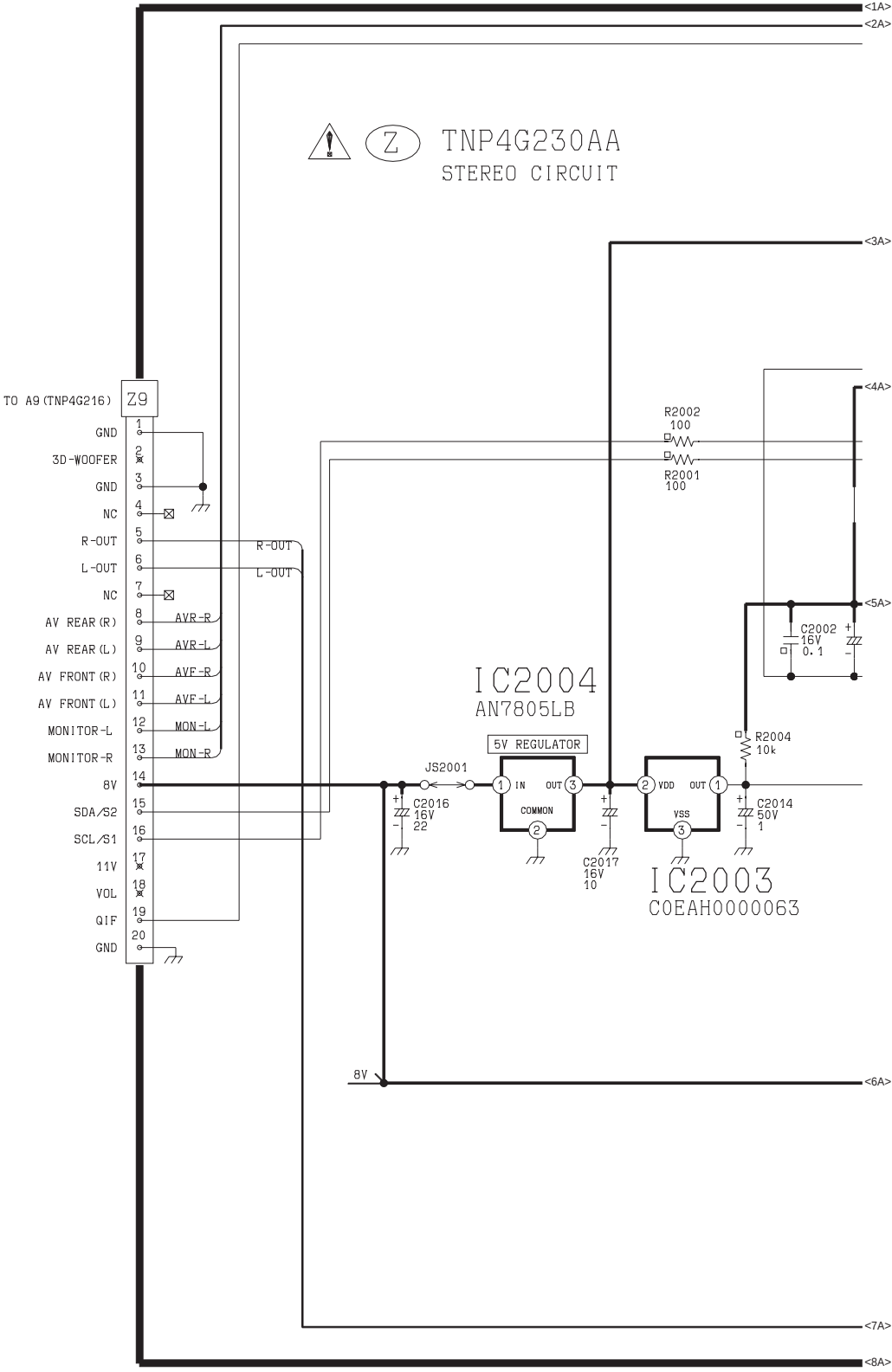

Z Board TC-21PS70R Schematic Diagram (1 of 2)

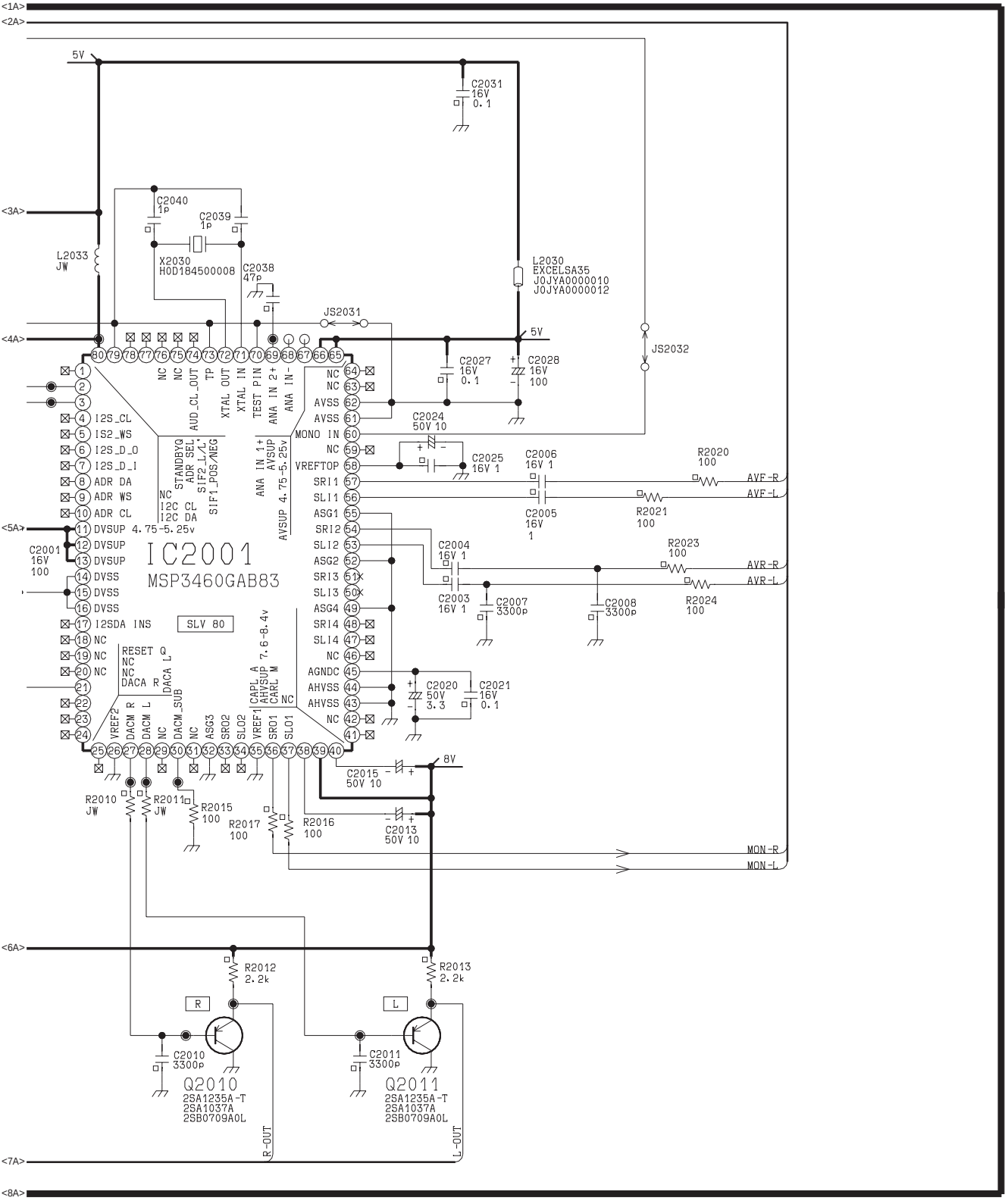

Z Board TC-21PS70R Schematic Diagram (2 of 2)