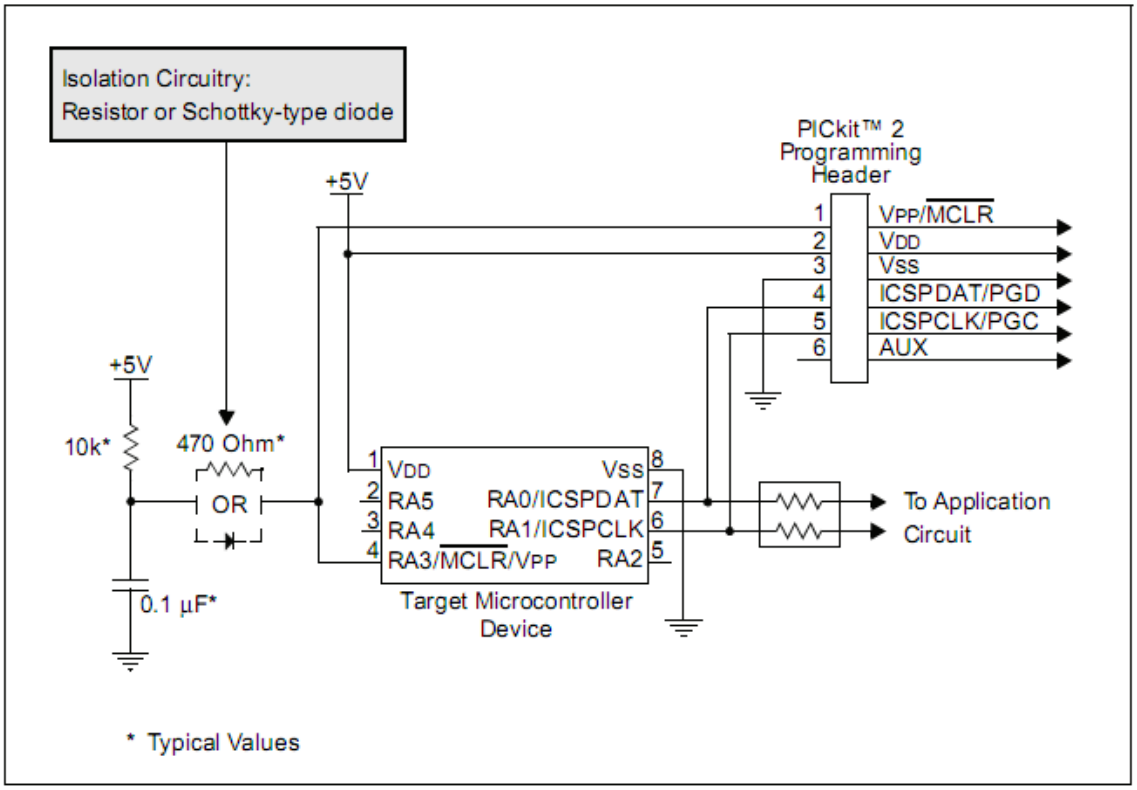**FIGURE 3-1: TYPICAL ICSP™ APPLICATION CIRCUIT**