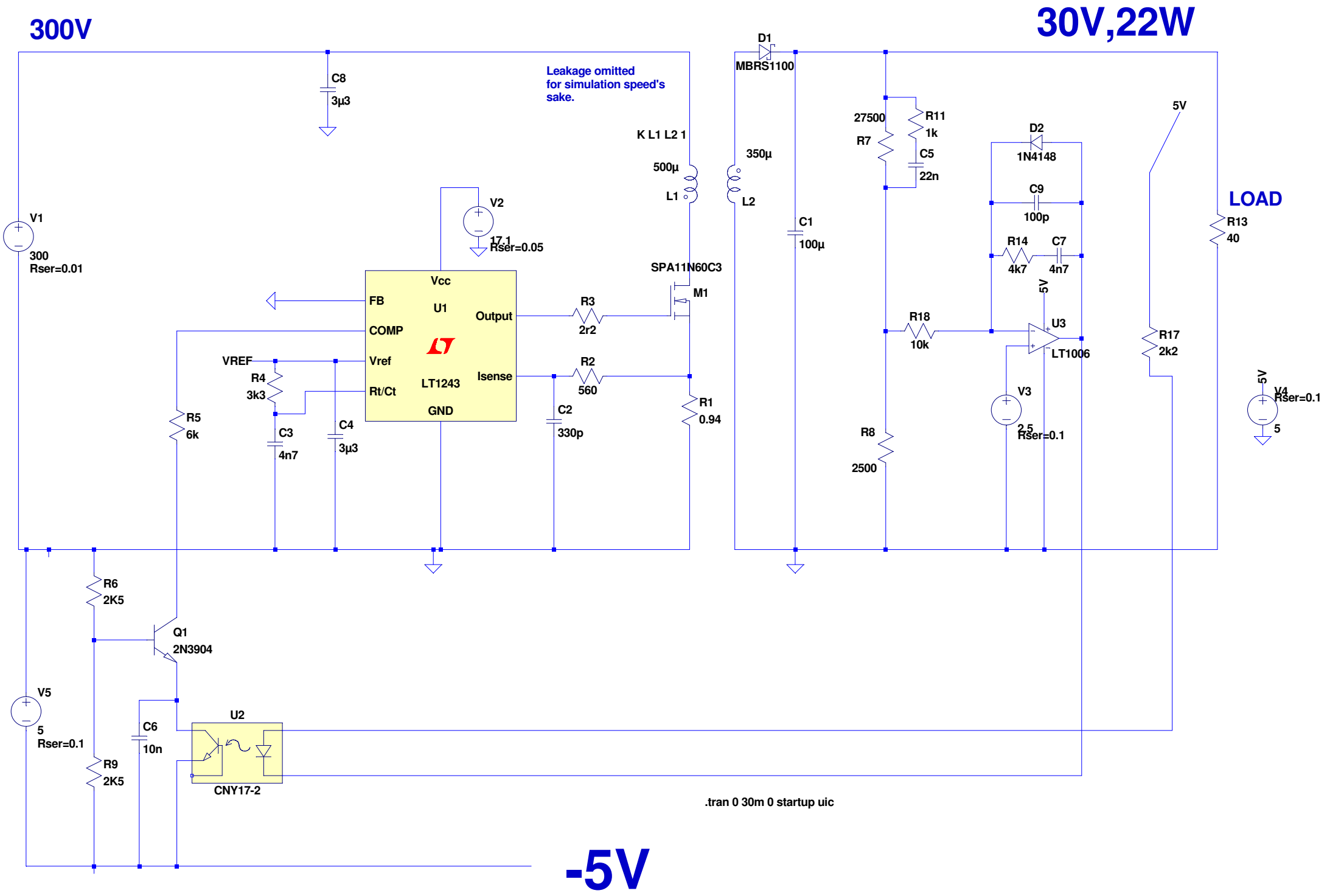
300V
30V,22W
C8
3µ3
Leakage omitted
for simulation speed's
sake.
D1
MBRS1100
K L1 L2 1
500µ
L1
350µ
L2
C1
100µ
27500
R7
R11
1k
C5
22n
D2
1N4148
C9
100p
R14
4k7
C7
4n7
5V
R13
40
LOAD
V1
300
Rser=0.01
V2
17.1
Rser=0.05
SPA11N60C3
M1
Vcc
FB
U1
Output
COMP
Vref
LT1243
Isense
Rt/Ct
GND
R3
2r2
R2
560
R1
0.94
VREF
R4
3k3
C3
4n7
C4
3µ3
R5
6k
C2
330p
R18
10k
U3
LT1006
V3
2.5
Rser=0.1
R8
2500
R17
2k2
V4
Rser=0.1
5
R6
2K5
Q1
2N3904
V5
5
Rser=0.1
C6
10n
R9
2K5
U2
CNY17-2
.tran 0 30m 0 startup uic
-5V
--- C:\forum\CACODE\Flyback _CASCODE OPTO1.asc ---