ESP-WROOM-02D/02U

Datasheet

Includes:

ESP-WROOM-02D

ESP-WROOM-02U

Version 1.2

Espressif Systems

Copyright © 2018

About This Guide

This document provides introduction to the specifications of ESP-WROOM-02D and ESP-WROOM-02U hardware.

Release Notes

Date	Version	Release notes
2017.11	V1.0	First release.
2018.03	V1.1	Updated the figure of ESP-WROOM-02U dimensions.
2018.08	V1.2	• Updated Table 1-1 and Table 1-2; • Updated module dimensions; • Added PCB pattern; • Updated document cover.

Documentation Change Notification

Espressif provides email notifications to keep customers updated on changes to technical documentation. Please subscribe at *https://www.espressif.com/en/subscribe*.

Certification

Download certificates for Espressif products from *https://www.espressif.com/en/certificates*.

Table of Contents

1. Overview 1
2. Pin Description 3
3. Functional Description 5
   - 3.1. CPU 5
   - 3.2. Memory 5
     - 3.2.1. Internal SRAM and ROM 5
     - 3.2.2. SPI Flash 5
   - 3.3. Crystal Oscillator 6
   - 3.4. Interface Description 6
4. Electrical Characteristics 8
   - 4.1. Electrical Characteristics 8
   - 4.2. Wi-Fi Radio 8
   - 4.3. Power Consumption 9
   - 4.4. Reflow Profile 10
   - 4.5. Electrostatic Discharge 11
5. Schematics 12
6. Peripheral Schematics 14
7. Dimensions 15
8. Recommended PCB Land Pattern 17
9. U.FL Connector Dimensions 19

A. Appendix—Learning Resources 20
   - A.1. Must-Read Documents 20
   - A.2. Must-Have Resources 21

1. Overview

ESP-WROOM-02D and ESP-WROOM-02U are ESP8266EX-based modules developed by Espressif. Compared to ESP-WROOM-02, the RF performance of ESP-WROOM-02D and ESP-WROOM-02U are optimized. Besides, ESP-WROOM-02U integrates a U.FL connector. Please see *Chapter 8* for details of U.FL connector.

Table 1-1. ESP-WROOM-02D vs. ESP-WROOM-02U

Module	ESP-WROOM-02D	ESP-WROOM-02U
Core	ESP8266	ESP8266
Antenna	Onboard antenna	IPEX antenna
Dimensions (unit: mm)	(18.00±0.10) x (20.00±0.10) x (3.20±0.10) See *Figure 6-1* for details.	(18.00±0.10) x (14.30±0.10) x (3.20±0.10) See *Figure 6-2* for details.
Schematics	See *Figure 5-1* for details.	See *Figure 5-2* for details.

📖 ***Note:***

For more information on ESP8266EX, please refer to ESP8266EX Datasheet.

Table 1-2. ESP-WROOM-02D/ESP-WROOM-02U Specifications

Categories	Items	Specifications
Certification	RF certification	SRRC, FCC, CE (RED), IC, NCC, KCC, TELEC (MIC)
	Green certification	RoHS, REACH
Test	Reliablity	HTOL/HTSL/uHAST/TCT/ESD
Wi-Fi	Wi-Fi protocols	802.11 b/g/n
	Frequency range	2.4 GHz ~ 2.5 GHz (2400M ~ 2483.5M)
Hardware	Peripheral interface	UART/HSPI/I2C/I2S/IR Remote Control
		GPIO/PWM
	Operating voltage	2.7V ~ 3.6V
	Operating current	Average: 80 mA
	Minimum current delivered by power supply	500 mA
	Operating temperature range	-40°C ~ 85°C
	Storage temperature	-40°C ~ 85°C
	External interface	-

Categories	Items	Specifications
Software	Wi-Fi mode	Station/SoftAP/SoftAP + Station
	Security	WPA/WPA2
	Encryption	WEP/TKIP/AES
	Firmware upgrade	UART Download/OTA (via network)/Download and write firmware via host
	Software development	Supports Cloud Server Development/SDK for custom firmware development
	Network protocols	IPv4, TCP/UDP/HTTP/FTP
	User configuration	AT Instruction Set, Cloud Server, Android/iOS app

2. Pin Description

Figure 2-1 shows the pin distribution of the ESP-WROOM-02D.

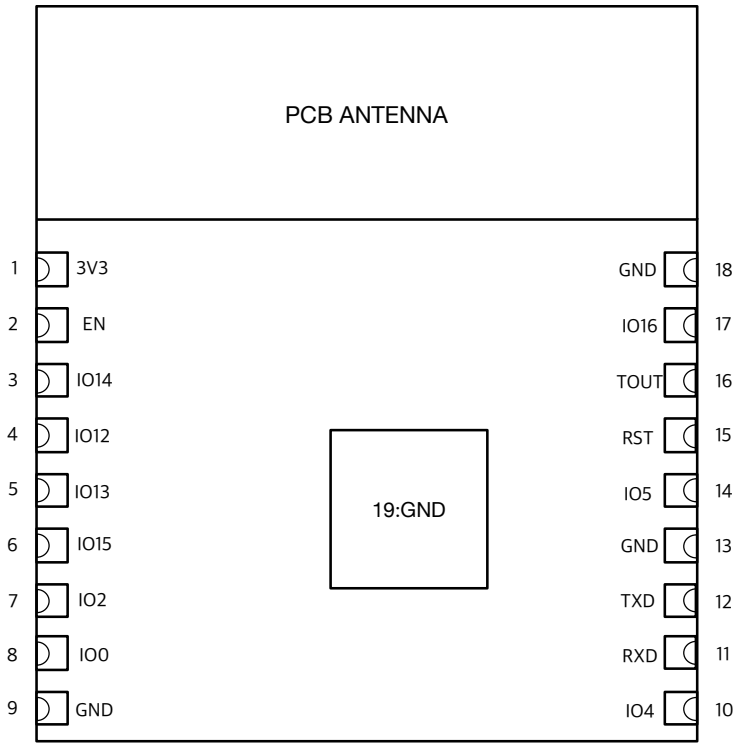

Figure 2-1. ESP-WROOM-02D Pin Layout (Top View)

> 📖 ***Note:***
>
> *The pin layout of ESP-WROOM-02U is the same with that of ESP-WROOM-02D, but it has no keepout zone for PCB antenna.*

ESP-WROOM-02D and ESP-WROOM-02U have 18 pins. Please see the pin definitions in Table 2-1.

Table 2-1. ESP-WROOM-02U/ESP-WROOM-02D Pin Definitions

No.	Pin Name	Functional Description
1	3V3	3.3V power supply (VDD) 📖 ***Note:*** *It is recommended the maximum output current a power supply provides be of 500 mA or above.*
2	EN	Chip enable pin. Active high.

No.	Pin Name	Functional Description
3	IO14	GPIO14; HSPI_CLK
4	IO12	GPIO12; HSPI_MISO
5	IO13	GPIO13; HSPI_MOSI; UART0_CTS
6	IO15	GPIO15; MTDO; HSPICS; UART0_RTS Pull down.
7	IO2	GPIO2; UART1_TXD Floating (internal pull-up) or pull up.
8	IO0	GPIO0 • UART download: pull down. • Flash boot: floating or pull up.
9	GND	GND
10	IO4	GPIO4
11	RXD	UART0_RXD, receive end in UART download; GPIO3
12	TXD	UART0_TXD, transmit end in UART download, floating or pull up; GPIO1
13	GND	GND
14	IO5	GPIO5
15	RST	Reset
16	TOUT	It can be used to test the power-supply voltage of VDD3P3 (Pin3 and Pin4) and the input power voltage of TOUT (Pin6). These two functions cannot be used simultaneously.
17	IO16	GPIO16; used for Deep-sleep wake-up when connected to RST pin.
18	GND	GND

3. Functional Description

3.1. CPU

The ESP8266EX integrates a Tensilica L106 32-bit RISC processor, which achieves extra-low power consumption and reaches a maximum clock speed of 160 MHz. The Real-Time Operating System (RTOS) and Wi-Fi stack allow 80% of the processing power to be available for user application programming and development. The CPU includes the interfaces as below:

- Programmable RAM/ROM interfaces (iBus), which can be connected with memory controller, and can also be used to visit flash.
- Data RAM interface (dBus), which can connected with memory controller.
- AHB interface which can be used to visit the register.

3.2. Memory

3.2.1. Internal SRAM and ROM

ESP8266EX Wi-Fi SoC integrates the memory controller and memory units including ROM and SRAM. MCU can access the memory units through iBus, dBus, and AHB interfaces. All memory units can be accessed upon request. A memory arbiter determines the running sequence in the arrival order of requests.

According to our current version of SDK, the SRAM space available to users is assigned as follows:

- RAM size < 50 kB, that is, when ESP8266EX is working in Station mode and connects to the router, available space in the Heap + Data sector is around 50 kB.
- There is no programmable ROM in ESP8266EX, therefore, the user program must be stored in an external SPI flash.

3.2.2. SPI Flash

ESP8266EX supports SPI flash. Theoretically speaking, ESP8266EX can support an up-to-16-MB SPI flash.

ESP-WROOM-02D and ESP-WROOM-02U currently integrate a 2-MB SPI flash. ESP-WROOM-02U supports these SPI modes: Standard SPI, DIO (Dual I/O), DOUT (Dual Output), QIO (Quad I/O) and QOUT (Quad Output).

3.3. Crystal Oscillator

ESP-WROOM-02U and ESP-WROOM-02D use a 26-MHz crystal oscillator. The accuracy of the crystal oscillator should be ±10 PPM.

When using the download tool, please select the right type of crystal oscillator. In circuit design, capacitors C1 and C2 which connect to the earth are added to the input and output terminals of the crystal oscillator respectively. The values of the two capacitors can be flexible, ranging from 6 pF to 22 pF, however, the specific capacitive values depend on further testing of, and adjustment to, the overall performance of the whole circuit. Normally, the capacitive values of C1 and C2 are within 10 pF for the 26-MHz crystal oscillator.

3.4. Interface Description

Table 3-1. Interface Description

Interface	Pin	Functional Description
HSPI	IO12 (MISO), IO13 (MOSI), IO14 (CLK), IO15 (CS)	Connects to SPI Flash, display screen, and MCU.
PWM	IO12 (R), IO15 (G),IO13 (B)	Currently the PWM interface has four channels, but users can extend it to eight channels. PWM interface can realize the control of LED lights, buzzers, relays, electronic machines, etc.
IR	IO14 (IR_T), IO5 (IR_R)	The functionality of the infrared remote control interface can be realized via software programming. The interface uses NEC coding, modulation, and demodulation. The frequency of the modulated carrier signal is 38 kHz.
ADC	TOUT	Tests the power supply voltage of VDD3P3 (Pin3 and Pin4) and the input power voltage of TOUT (Pin6). However, these two functions cannot be used simultaneously. This interface is typically used in sensors.
I2C	IO14 (SCL), IO2 (SDA)	Connects to external sensors and display screens, etc.
UART	UART0: TXD (U0TXD), RXD (U0RXD), IO15 (RTS), IO13 (CTS) UART1: IO2 (TXD)	Communicates with the UART device. Downloading: U0TXD + U0RXD or GPIO2 + U0RXD Communicating: (UART0): U0TXD, U0RXD, MTDO (U0RTS), MTCK (U0CTS) Debugging: UART1_TXD (GPIO2) can be used to print debugging information. By default, UART0 will output some printed information when you power on ESP8266EX. If this issue influences some specific applications, users can exchange the inner pins of UART when initializing ESP8266EX, that is, exchange U0TXD and U0RXD with U0RTS and U0CTS. Users can connect MTDO and MTCK to the serial port of the external MCU to realize the communication.

Interface	Pin	Functional Description
I2S	I2S input: IO12 (I2SI_DATA) ; IO13 (I2SI_BCK); IO14 (I2SI_WS);	Collects, processes and transmits audio data.
	I2S output: IO15 (I2SO_BCK); IO3 (I2SO_DATA); IO2 (I2SO_WS).	

4. Electrical Characteristics

> **Note:**
> *Unless otherwise specified, measurements are based on VDD = 3.3V, TA = 25°C.*

4.1. Electrical Characteristics

Table 4-1. Electrical Characteristics

Parameter	Symbol	Min	Typ	Max	Unit
Storage temperatue	-	–40	Normal	85	°C
Operating temperature	-	–40	20	85	°C
Maximum soldering temperature (Condition: IPC/JEDEC J-STD-020)	-	-	-	260	°C
Supply voltage	VDD	2.7	3.3	3.6	V
Input logic level low	V_{IL}	–0.3	-	0.25 VDD	V
Input logic level high	V_{IH}	0.75 VDD	-	VDD + 0.3	V
Output logic level low	V_{OL}	-	-	0.1 VDD	V
Output logic level high	V_{OH}	0.8 VDD	-	-	V

4.2. Wi-Fi Radio

Table 4-2. Wi-Fi Radio Characteristics

Description	Min	Typ	Max	Unit
Input frequency	2412	-	2484	MHz
Input reflection	-	-	–10	dB
Output Impedance	-	*	-	Ω
Output Power				
PA output power at 72.2 Mbps	13	14	15	dBm
PA output power in 11b mode	19.5	20	20.5	dBm
Sensitivity				
DSSS, 1 Mbps	-	–98	-	dBm

Description	Min	Typ	Max	Unit
CCK, 11 Mbps	-	–91	-	dBm
6 Mbps (1/2 BPSK)	-	–93	-	dBm
54 Mbps (3/4 64-QAM)	-	–75	-	dBm
HT20, MCS7 (65 Mbps, 72.2 Mbps)	-	–72	-	dBm
Adjacent channel rejection				
OFDM, 6 Mbps	-	37	-	dB
OFDM, 54 Mbps	-	21	-	dB
HT20, MCS0	-	37	-	dB
HT20, MCS7	-	20	-	dB

📖 ***Note:***

For the module that uses an IPEX antenna, the output impedance is 50Ω.

4.3. Power Consumption

The following power consumption data were obtained from the tests with a 3.3V power supply and a voltage stabilizer, in 25°C ambient temperature. All data are based on 50% duty cycle in continuous transmission mode.

Table 4-3. Power Consumption

Modes	Min	Typ	Max	Unit
Tx 802.11b, CCK 11 Mbps, P_{OUT} = +17 dBm	-	170	-	mA
Tx 802.11g, OFDM 54 Mbps, P_{OUT} = +15 dBm	-	140	-	mA
Tx 802.11n, MCS7, P_{OUT} = +13 dBm	-	120	-	mA
Rx 802.11b, 1024 bytes packet length , –80 dBm	-	50	-	mA
Rx 802.11g, 1024 bytes packet length , –70 dBm	-	56	-	mA
Rx 802.11n, 1024 bytes packet length , –65 dBm	-	56	-	mA
Modem-sleep①	-	15	-	mA
Light-sleep②	-	0.9	-	mA
Deep-sleep③	-	20	-	μA
Power Off	-	0.5	-	μA

📖 ***Notes:***

① ***Modem-sleep*** *is used when such applications as PWM or I2S require the CPU to be working. In cases where Wi-Fi connectivity is maintained and data transmission is not required, the Wi-Fi Modem circuit can be shut down to save power, according to 802.11 standards (such as U-APSD). For example, in DTIM3, when ESP8266EX sleeps for 300 ms and wakes up for 3 ms to receive Beacon packages from AP, the overall average current consumption is about 15 mA.*

② ***Light-sleep*** *is used for applications whose CPU may be suspended, such as Wi-Fi switch. In cases where Wi-Fi connectivity is maintained and data transmission is not required, the Wi-Fi Modem circuit and CPU can be shut down to save power, according to 802.11 standards (such as U-APSD). For example, in DTIM3, when ESP8266EX sleeps for 300 ms and wakes up for 3 ms to receive Beacon packages from AP, the overall average current consumption is about 0.9 mA.*

③ ***Deep-sleep*** *is for applications that do not require Wi-Fi connectivity but only transmit data over long time lags, e.g., a temperature sensor that measures temperature every 100s. For example, when ESP8266EX sleeps for 300s then wakes up to connect to AP (taking about 0.3 ~ 1s), the overall average current consumption is far less than 1 mA. The current consumption of 20 μA was obtained at the voltage of 2.5V.*

4.4. Reflow Profile

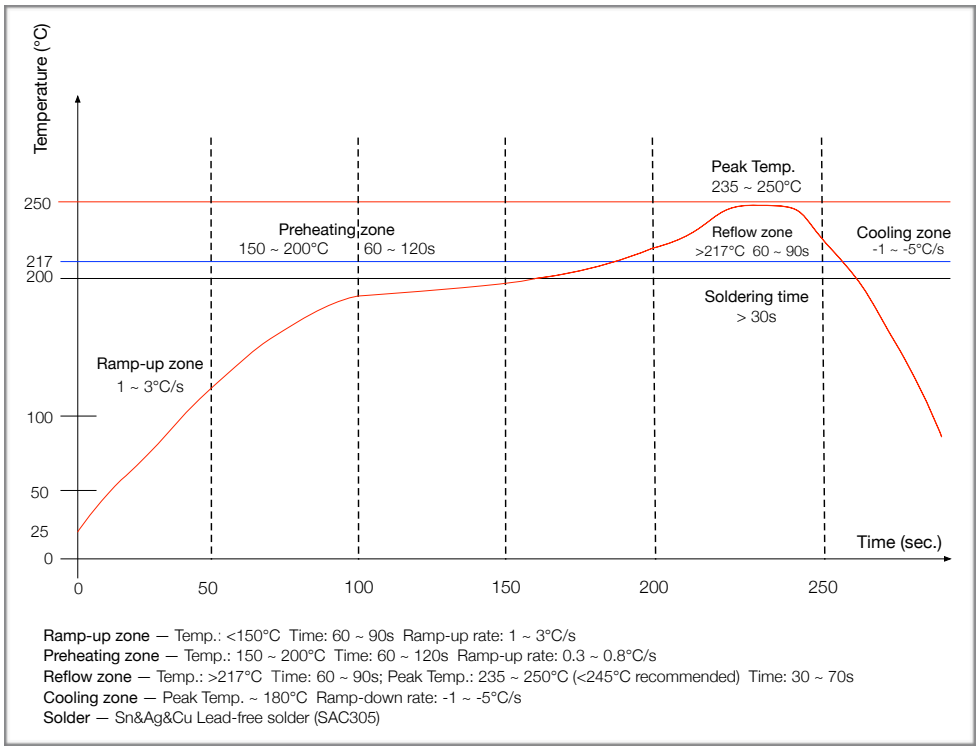

Figure 4-1. ESP-WROOM-02D/ESP-WROOM-02U Reflow Profile

4.5. Electrostatic Discharge

Table 4-4. Electrostatic Discharge Parameters

Name	Symbol	Reference	Level	Max	Unit
Electrostatic Discharge (Human - Body Model)	V_{ESD} (HBM)	Temperature: 23 ± 5°C Based on ANSI/ESDA/JEDEC JS - 001 - 2014	2	2000	V
Electrostatic Discharge (Charged - Device Model)	V_{ESD} (CDM)	Temperature: 23 ± 5°C Based on JEDEC EIA/JESD22 - C101F	C2	500	

5. Schematics

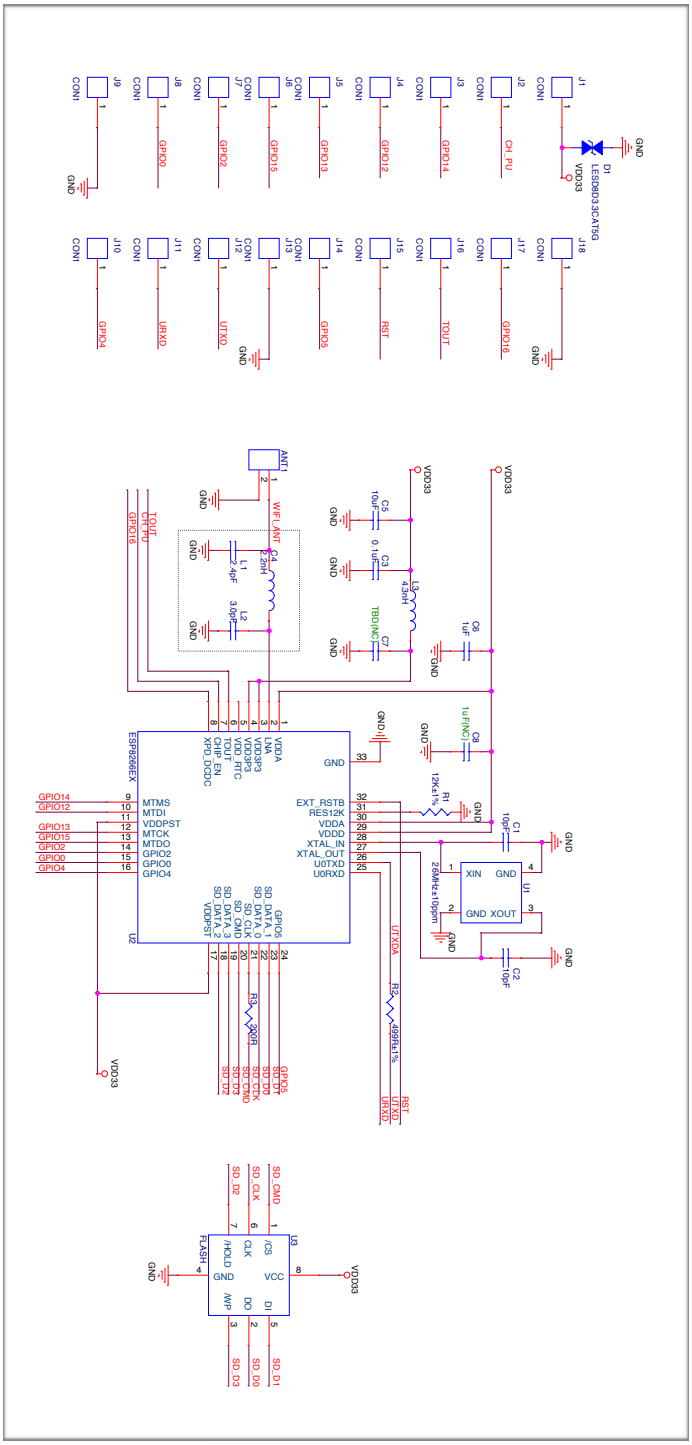

Figure 5-1. ESP-WROOM-02D Schematics

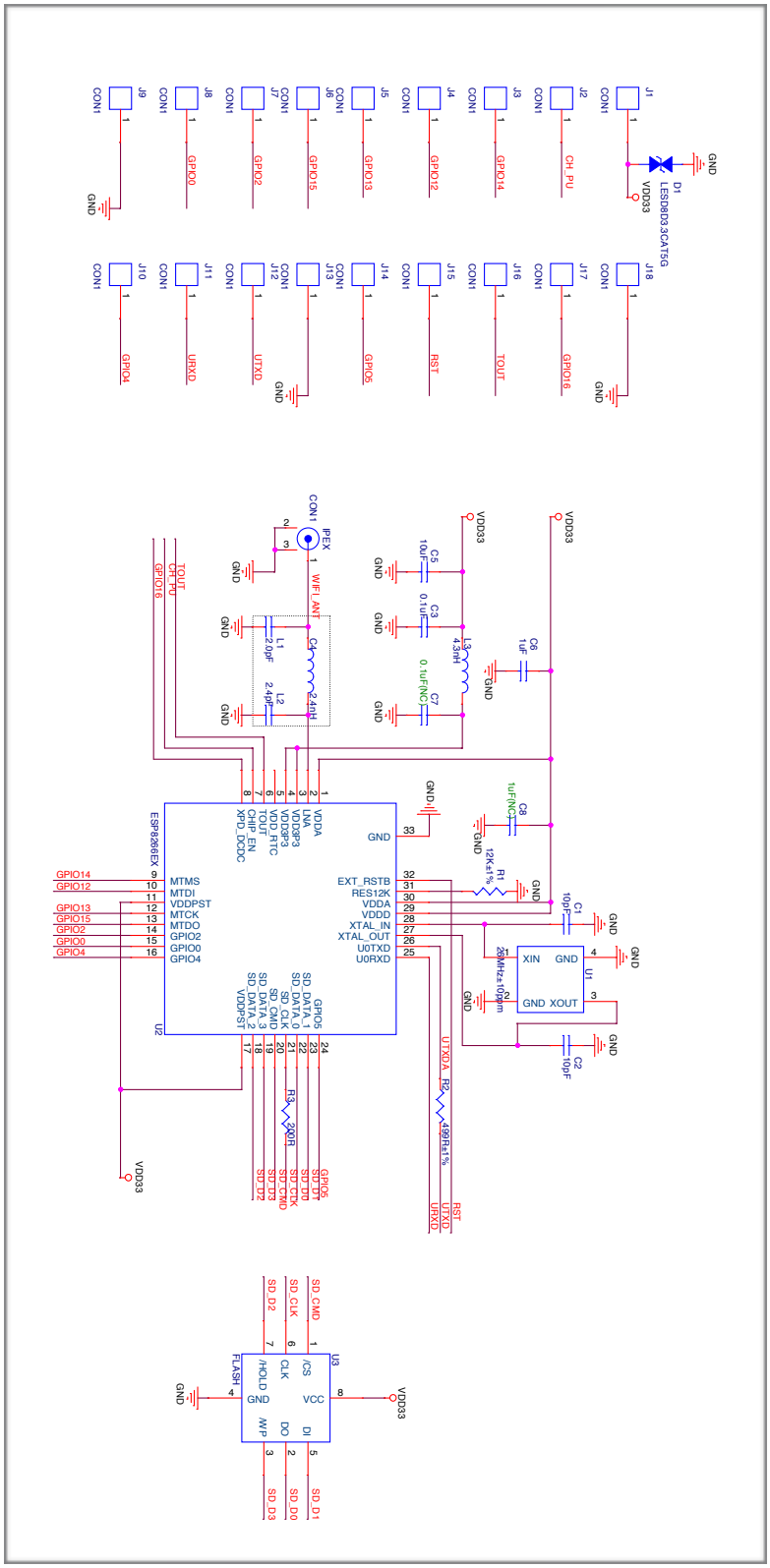

Figure 5-2. ESP-WROOM-02U Schematics

6. Peripheral Schematics

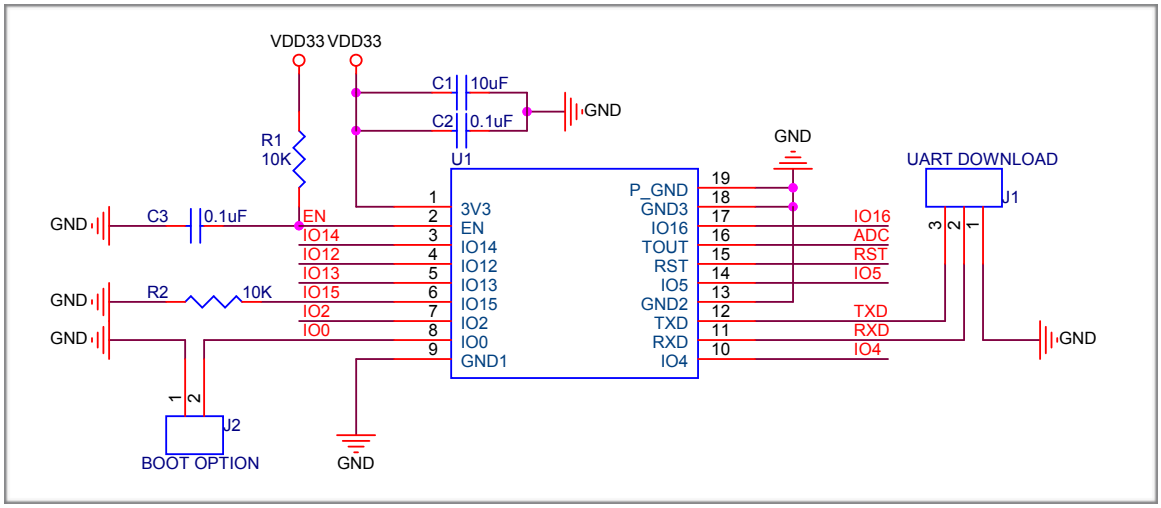

Figure 6-1. ESP-WROOM-02D/ESP-WROOM-02U Peripheral Schematics

> 📖 ***Note:***
>
> *It is recommended that users do not solder Pad 19 to the base board. If users do want to solder it, they need to ensure that the correct quantity of soldering paste is applied.*

7. Dimensions

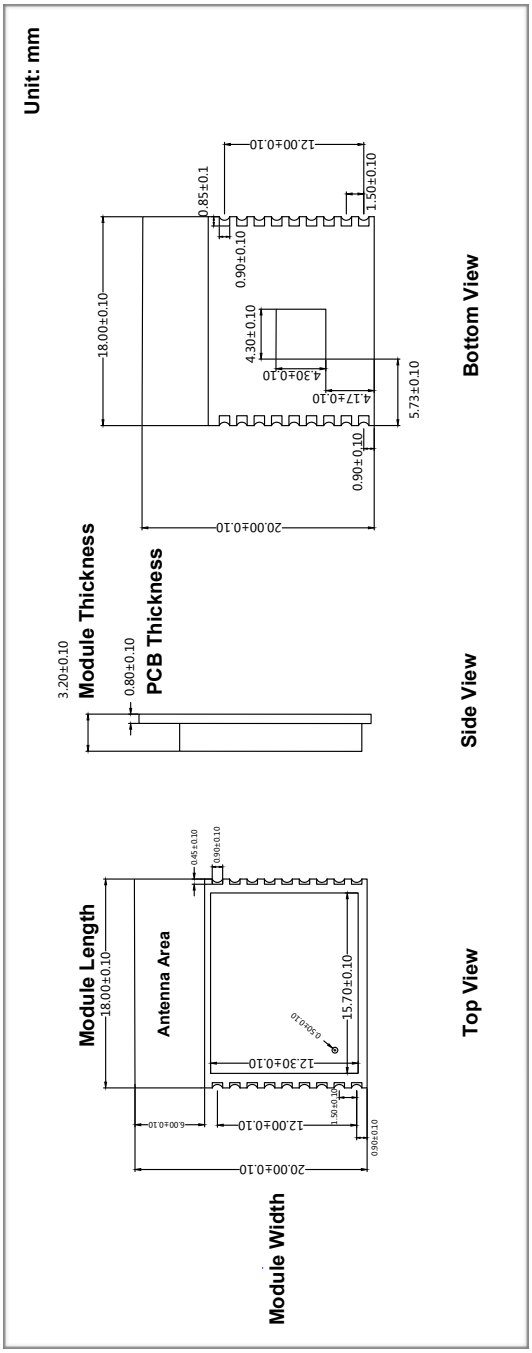

Figure 7-1. ESP-WROOM-02D Dimensions

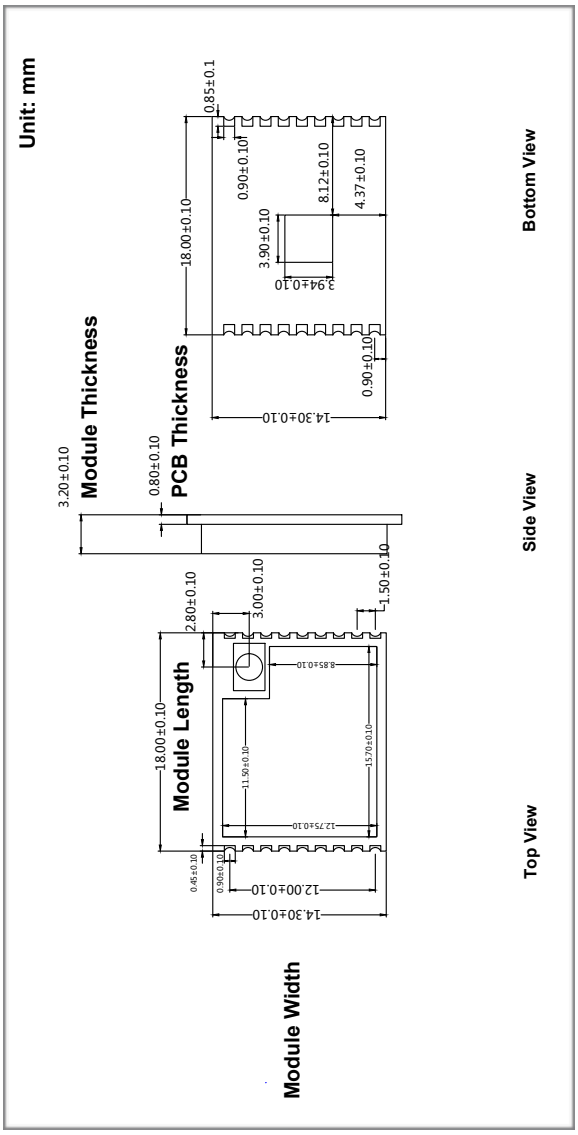

Figure 7-2. ESP-WROOM-02U Dimensions

8. Recommended PCB Land Pattern

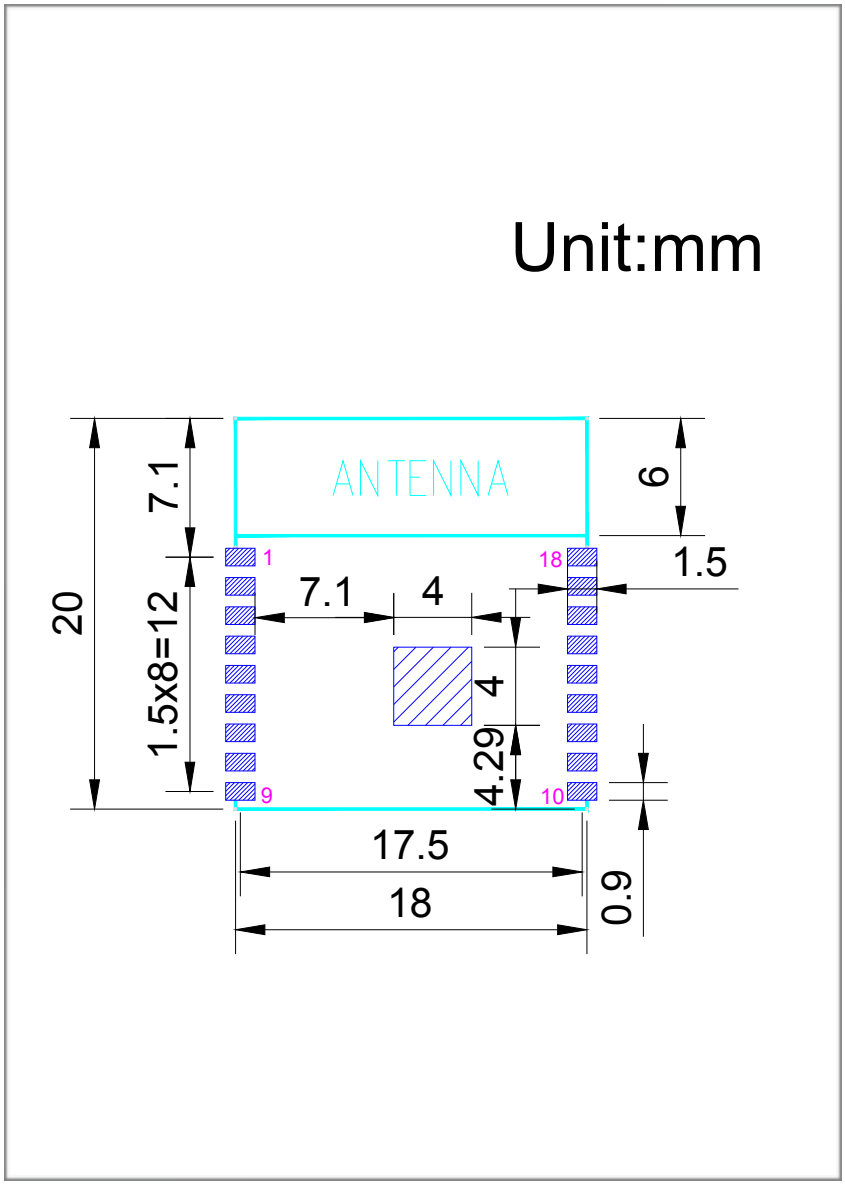

Figure 8-1. Recommended PCB Land Pattern of ESP-WROOM-02D

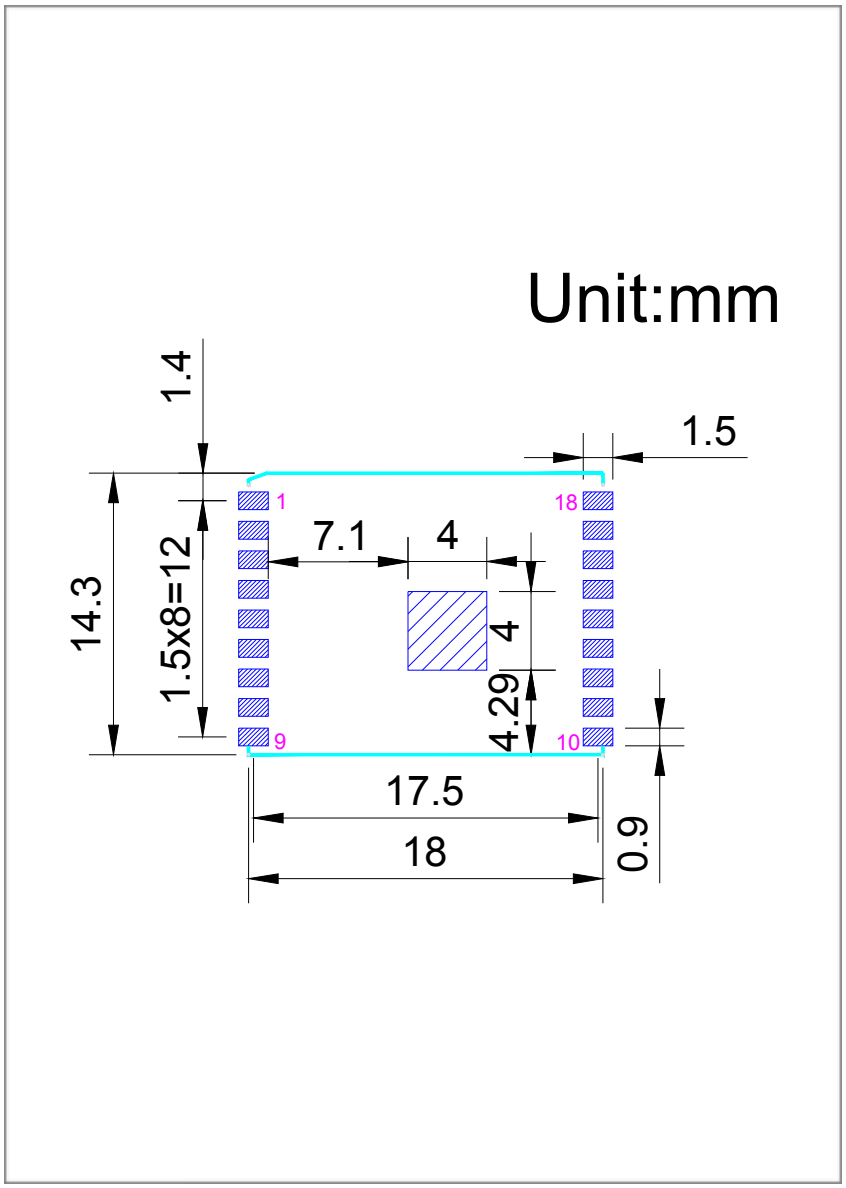

Figure 8-2. Recommended PCB Land Pattern of ESP-WROOM-02U

9. U.FL Connector Dimensions

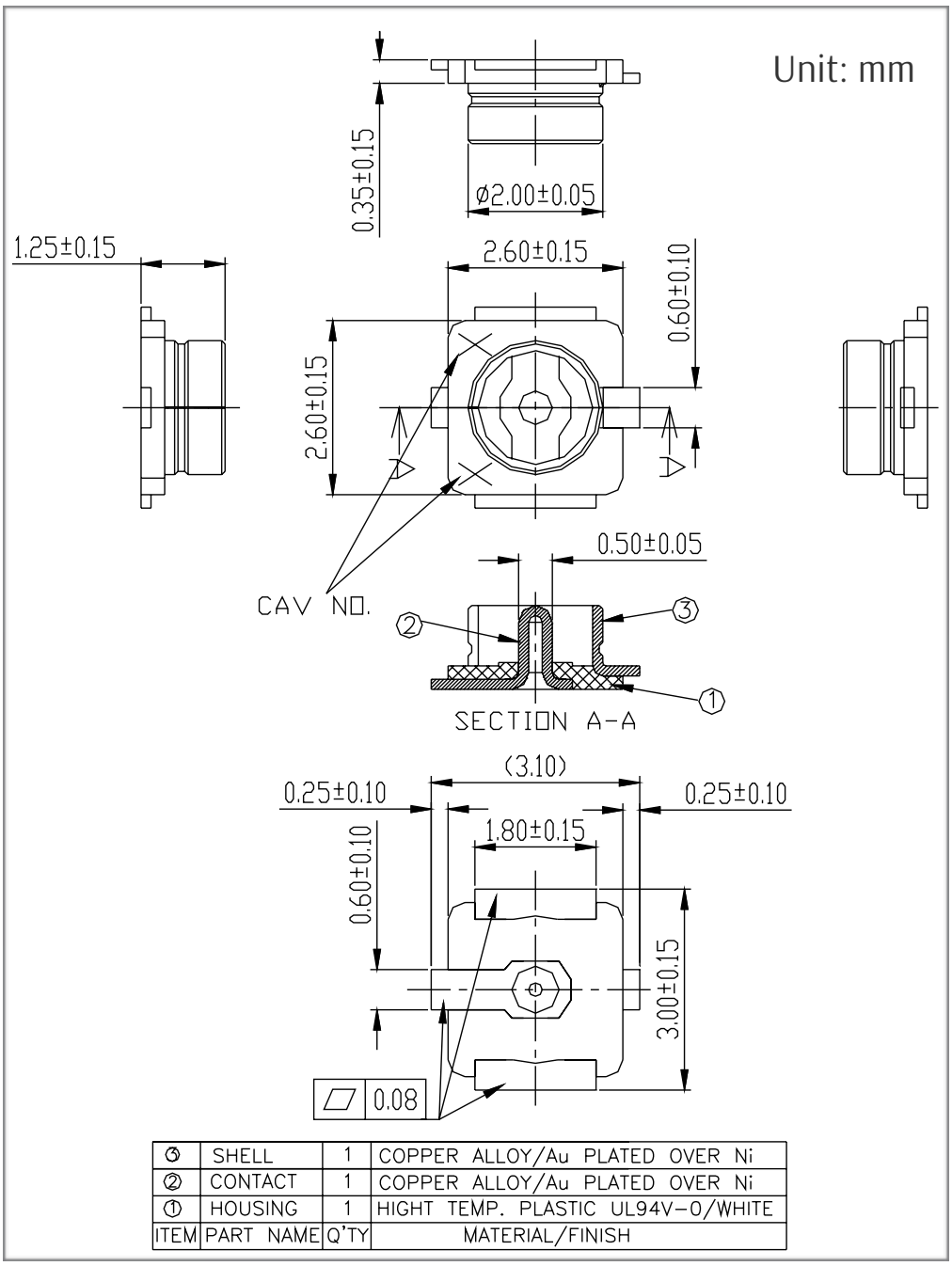

Figure 8-1. Dimensions of ESP-WROOM-02U's U.FL Connector

A. Appendix—Learning Resources

A.1. Must-Read Documents

- *ESP8266 Quick Start Guide*

  Description: This document is a quick user guide to getting started with ESP8266. It includes an introduction to the ESP-LAUNCHER, how to download firmware on to the board and run it, how to compile the AT application, structure and the debugging method of RTOS SDK. Basic documentation and other related resources for the ESP8266 are also provided.

- *ESP8266 SDK Getting Started Guide*

  Description: This document takes ESP-LAUNCHER and ESP-WROOM-02U as examples to introduce how to use ESP8266 SDK. The contents include preparations before compilation, SDK compilation and firmware download.

- *ESP-WROOM-02 PCB Design and Module Placement Guide*

  Description: The ESP-WROOM-02U module is designed to be soldered to a host PCB. This document compares six different placements of the antenna on a host board and provides notes on designing PCB.

- *ESP8266 Hardware Resources*

  Description: This zip package includes manufacturing specifications of the ESP8266 board and the modules, manufacturing BOM and schematics.

- *ESP8266 AT Command Examples*

  Description: This document introduces some specific examples of using Espressif AT commands, including single connection as a TCP Client, UDP transmission and transparent transmission, and multiple connection as a TCP server.

- *ESP8266 AT Instruction Set*

  Description: This document provides lists of AT commands based on ESP8266_NONOS_SDK, including user-defined AT commands, basic AT commands, Wi-Fi AT commands and TCP/IP-related AT commands. It also introduces the downloading of AT firmware into flash.

- *TCP/UDP UART Passthrough Test Demonstration*

  Description: This guide is intended to help users run a TCP & UDP passthrough test on the ESP8266 IoT platform.

- *FAQ*

A.2. Must-Have Resources

- *ESP8266 SDKs*

  Description: This website page provides links to the latest version of ESP8266 SDK and the older ones.

- *ESP8266 Tools*

  Description: This website page provides links to the ESP8266 flash download tools and ESP8266 performance evaluation tools.

- *ESP8266 App*
- *ESP8266 Certification and Test Guide*
- *ESP8266 BBS*
- *ESP8266 Resources*

Espressif IoT Team

www.espressif.com

Disclaimer and Copyright Notice

Information in this document, including URL references, is subject to change without notice.

THIS DOCUMENT IS PROVIDED AS IS WITH NO WARRANTIES WHATSOEVER, INCLUDING ANY WARRANTY OF MERCHANTABILITY, NON-INFRINGEMENT, FITNESS FOR ANY PARTICULAR PURPOSE, OR ANY WARRANTY OTHERWISE ARISING OUT OF ANY PROPOSAL, SPECIFICATION OR SAMPLE.

All liability, including liability for infringement of any proprietary rights, relating to use of information in this document is disclaimed. No licenses express or implied, by estoppel or otherwise, to any intellectual property rights are granted herein.

The Wi-Fi Alliance Member logo is a trademark of the Wi-Fi Alliance. The Bluetooth logo is a registered trademark of Bluetooth SIG.

All trade names, trademarks and registered trademarks mentioned in this document are property of their respective owners, and are hereby acknowledged.

Copyright © 2018 Espressif Inc. All rights reserved.

Mouser Electronics

Authorized Distributor

Click to View Pricing, Inventory, Delivery & Lifecycle Information:

Espressif:

ESP-WROOM-02D ESP-WROOM-02U ESP-WROOM-02U (4MB) ESP-WROOM-02D (4MB)