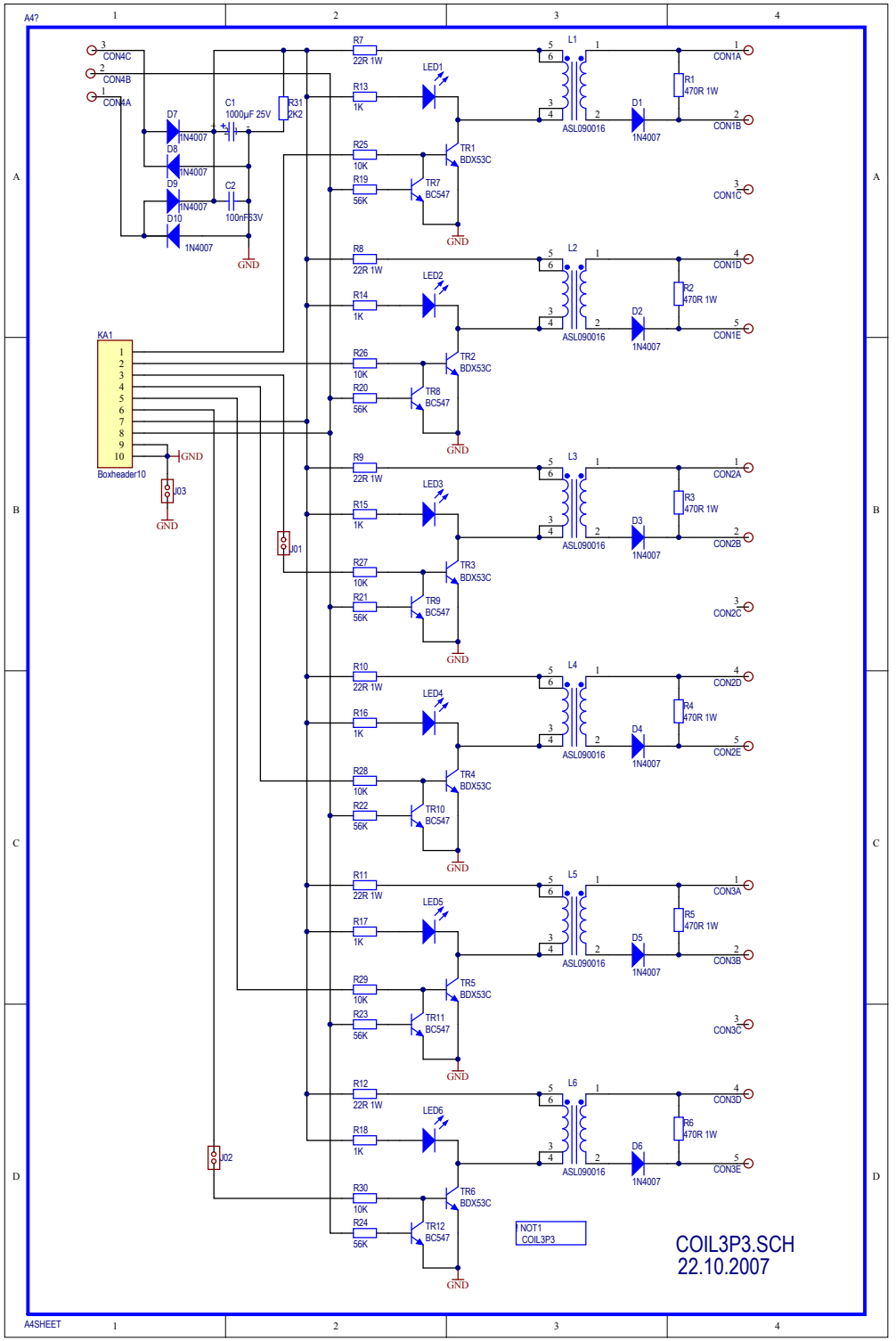
A4?
A4SHEET
CON4C
CON4B
CON4A
D7
1N4007
D8
1N4007
D9
1N4007
D10
1N4007
C1
1000µF 25V
C2
100nF63V
R31
2K2
GND
KA1
Boxheader10
J03
J01
J02
R7
22R 1W
R13
1K
R25
10K
R19
56K
LED1
TR1
BDX53C
TR7
BC547
L1
ASL090016
D1
1N4007
R1
470R 1W
CON1A
CON1B
CON1C
R8
22R 1W
R14
1K
R26
10K
R20
56K
LED2
TR2
BDX53C
TR8
BC547
L2
ASL090016
D2
1N4007
R2
470R 1W
CON1D
CON1E
R9
22R 1W
R15
1K
R27
10K
R21
56K
LED3
TR3
BDX53C
TR9
BC547
L3
ASL090016
D3
1N4007
R3
470R 1W
CON2A
CON2B
CON2C
R10
22R 1W
R16
1K
R28
10K
R22
56K
LED4
TR4
BDX53C
TR10
BC547
L4
ASL090016
D4
1N4007
R4
470R 1W
CON2D
CON2E
R11
22R 1W
R17
1K
R29
10K
R23
56K
LED5
TR5
BDX53C
TR11
BC547
L5
ASL090016
D5
1N4007
R5
470R 1W
CON3A
CON3B
CON3C
R12
22R 1W
R18
1K
R30
10K
R24
56K
LED6
TR6
BDX53C
TR12
BC547
L6
ASL090016
D6
1N4007
R6
470R 1W
CON3D
CON3E
NOT1
COIL3P3
COIL3P3.SCH
22.10.2007

! NOT1 183.1348mm x 101.8548mm - 1.6mm FR4 - 35u BAKIR - SIYAH MASKE

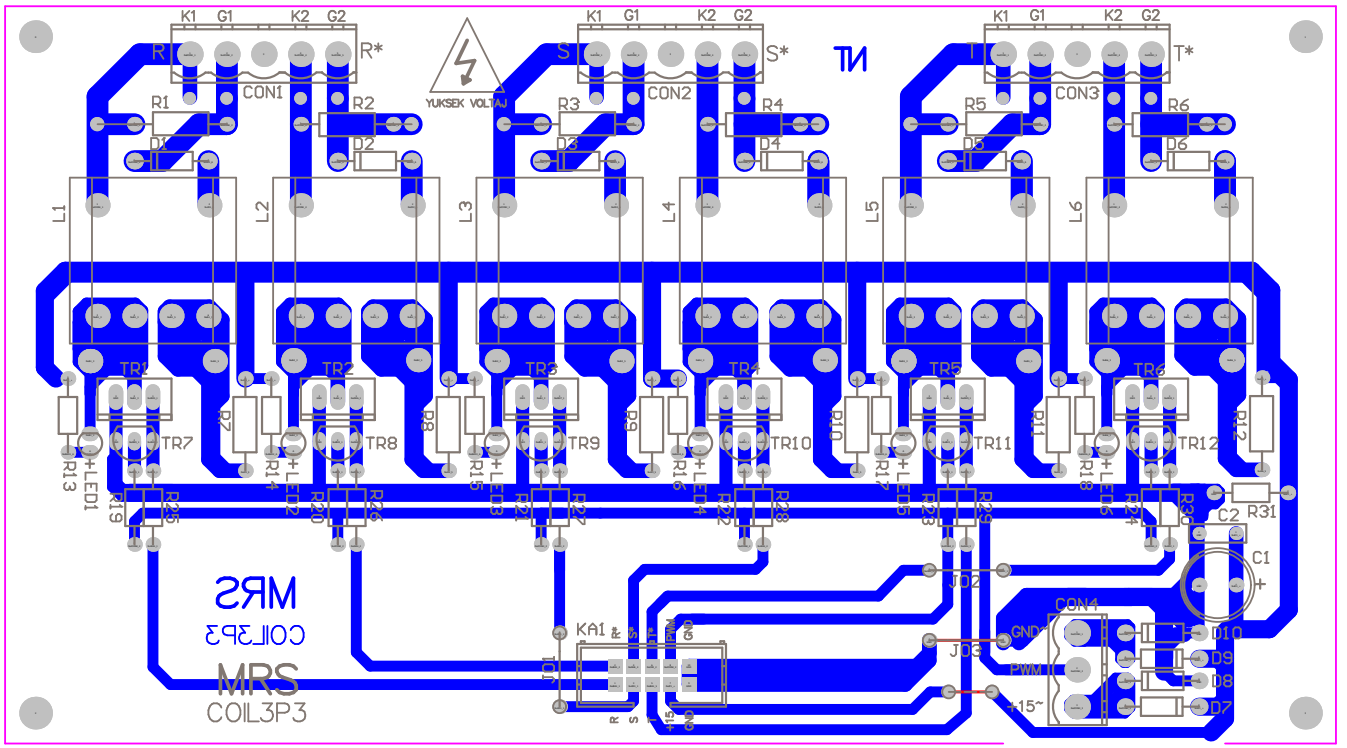

A4?