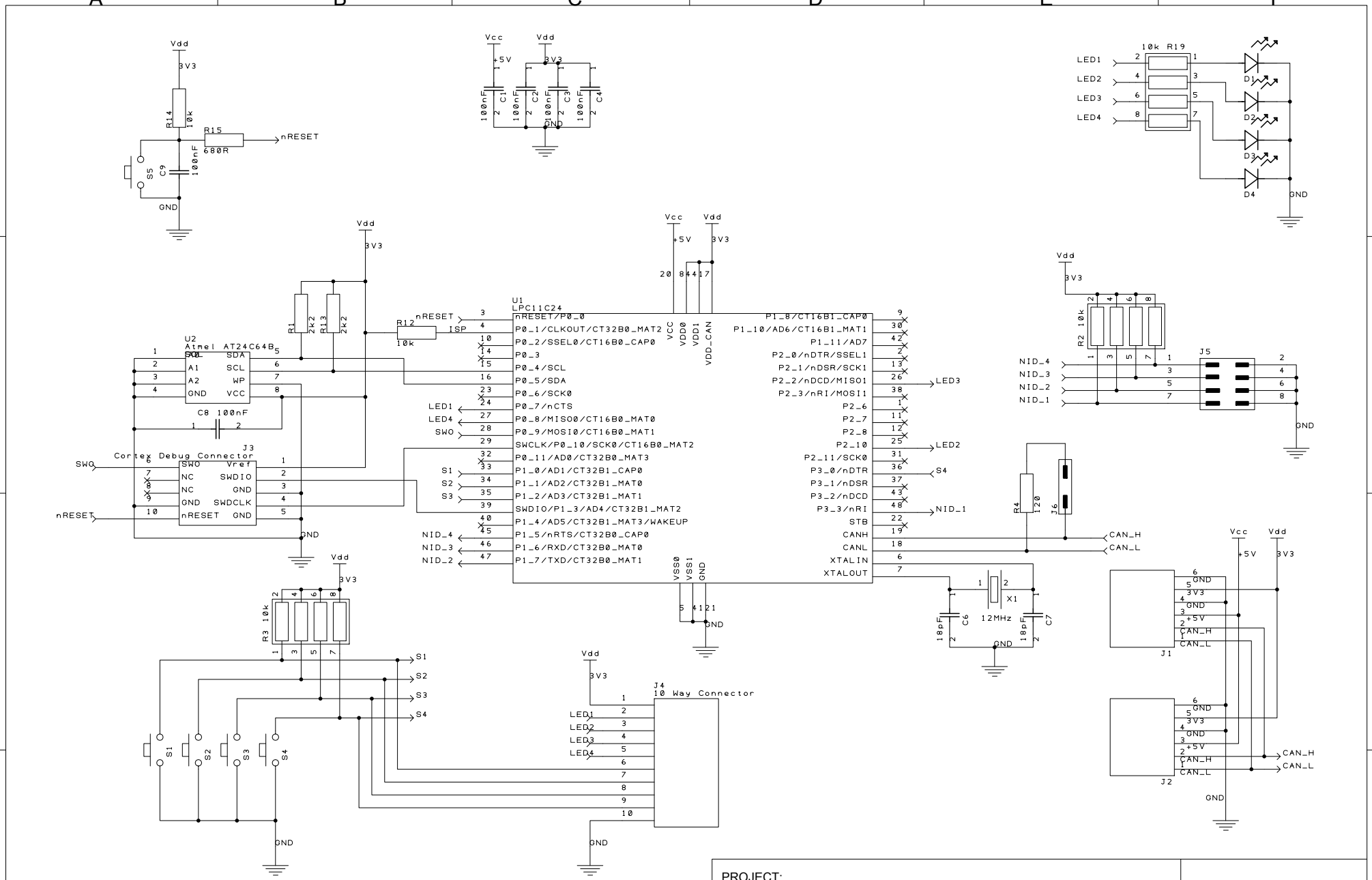

PROJECT:

DRAWING TITLE:

DRAWN BY:

REVISION:

SHEET: OF

STATUS:

DATE:

T1

A4_Template