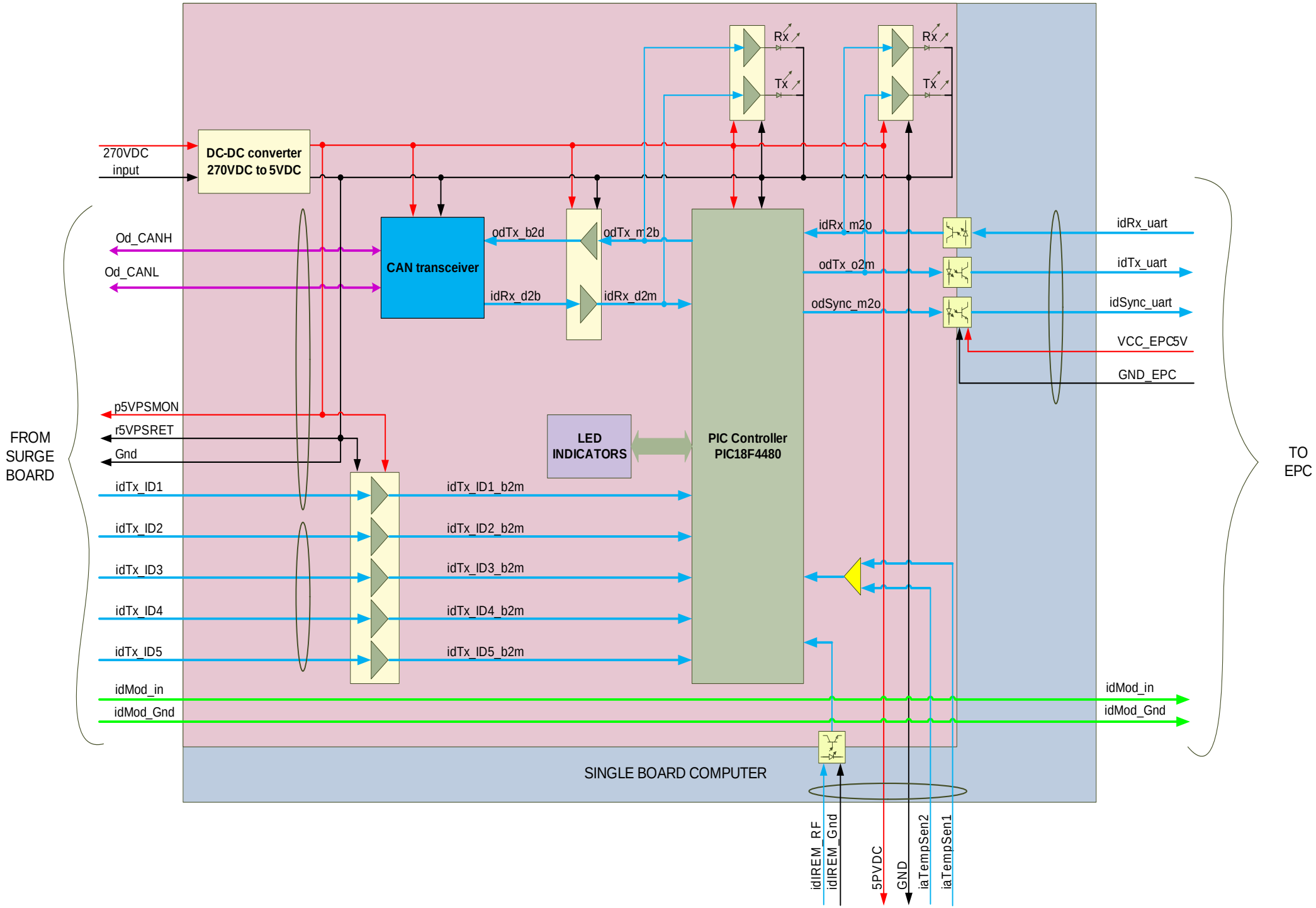Internal Block Diagram of Single Board Micro Computer (SBC)