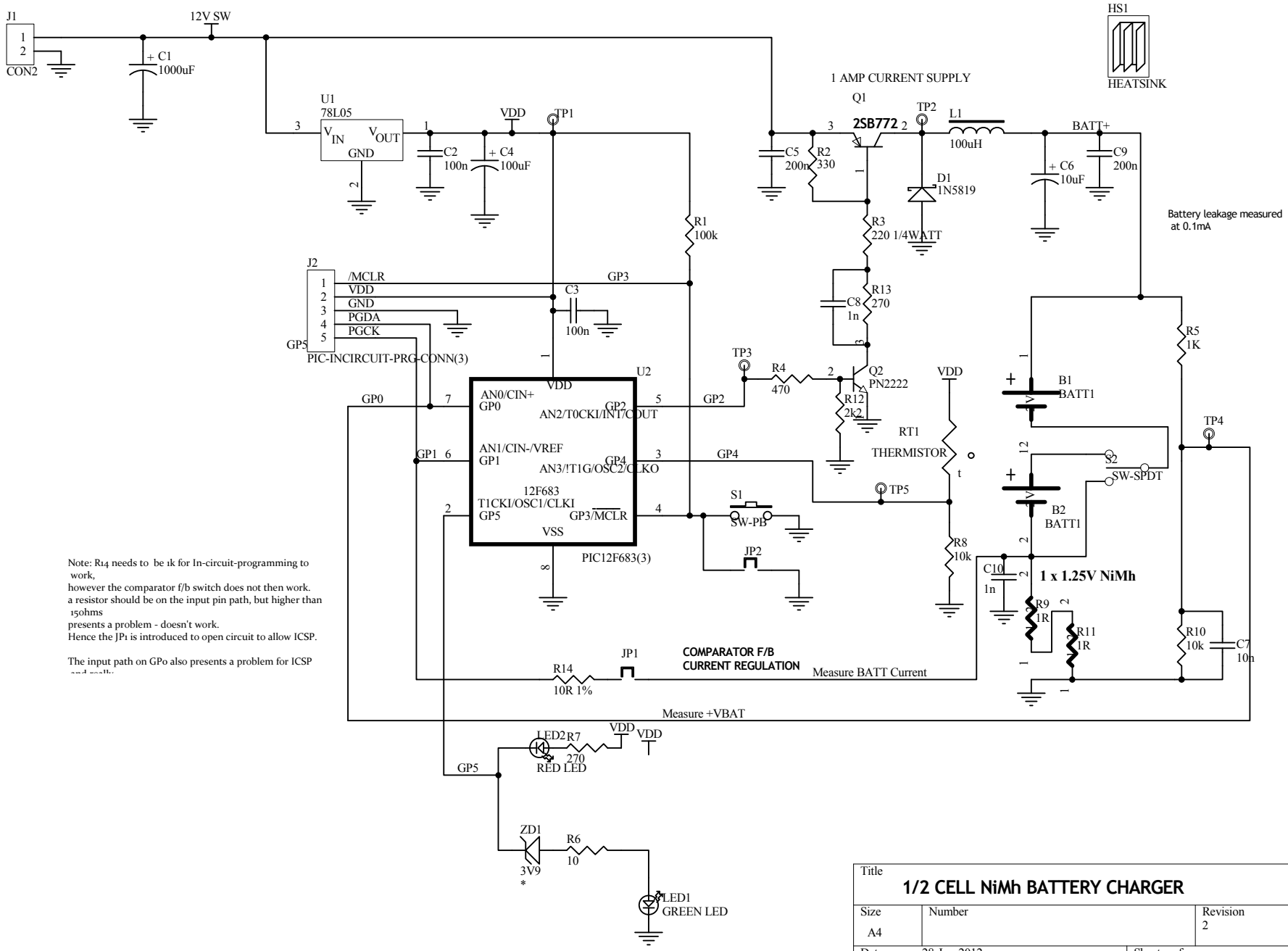

Title		
1/2 CELL NiMh BATTERY CHARGER		
Size A4	Number	Revision 2
Date: 28-Jun-2012		Sheet of
File: E:\Projects\BattCharger\design\BattCharger.Dsn		Drawn By: